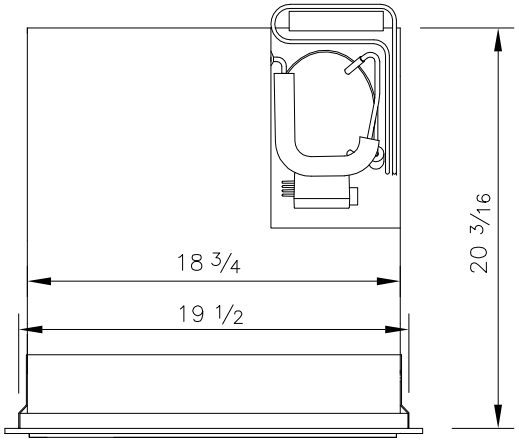

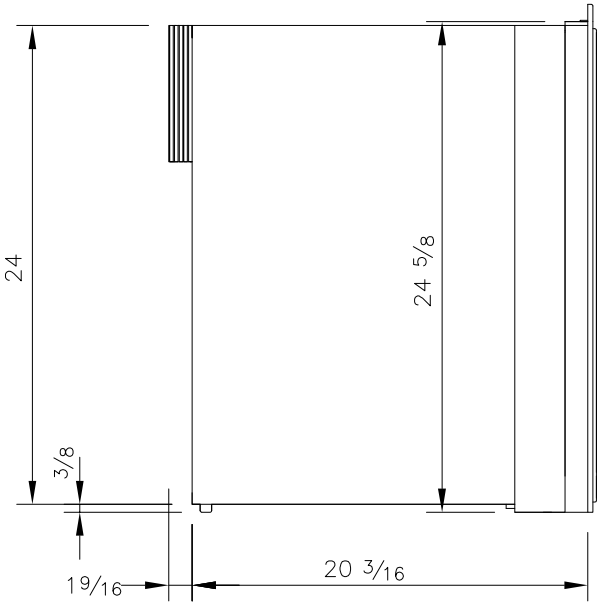

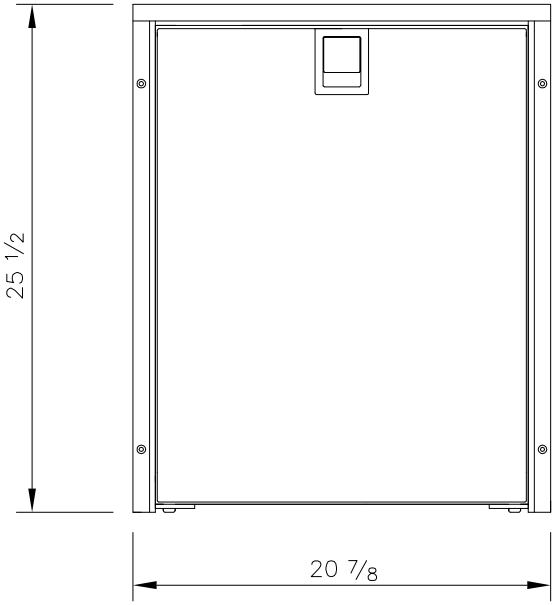

Itemref	Quantity	Title/Name, designation, material, dimension etc			Article No./Reference	
Designed by		Checked by	Approved by – date	Filename	Date 080103/LLG	Scale
Owner isotherm by indel marine				Title/Name Isotherm Cruise 63 Freezer		
				Drawing number CR63 Freezer	Edition INOX	Sheet U

RevNo	Revision note	Date	Signature	Checked