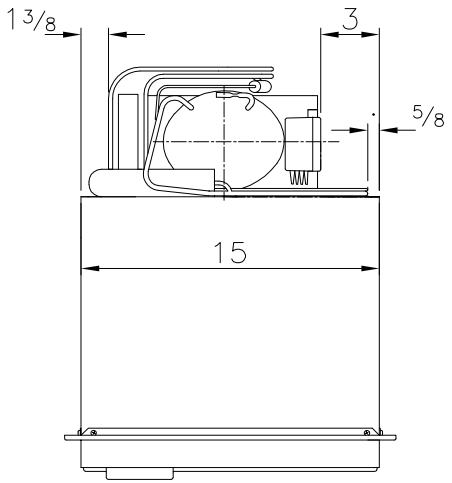

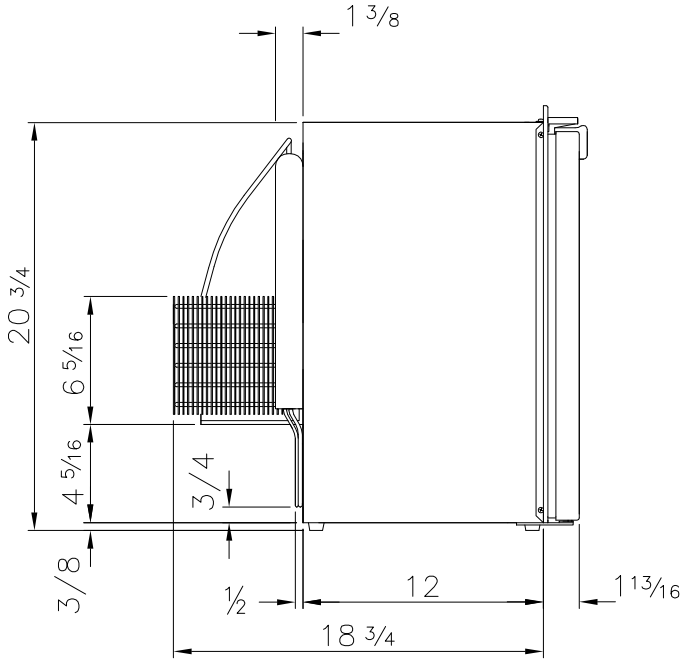

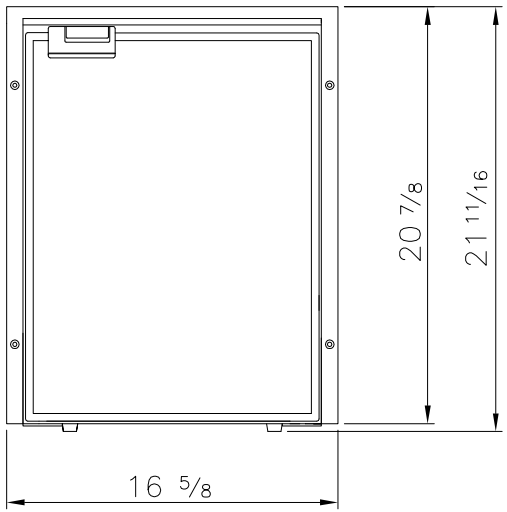

Installation dimensions (in.)

Itemref	Quantity	Title/Name, designation, material, dimension etc			Article No./Reference	
Designed by		Checked by	Approved by – date	Filename	Date 080103/LLG	Scale
Owner				Title/Name Isotherm Cruise 42		
				Drawing number CR42	Edition US	Sheet

RevNo	Revision note	Date	Signature	Checked