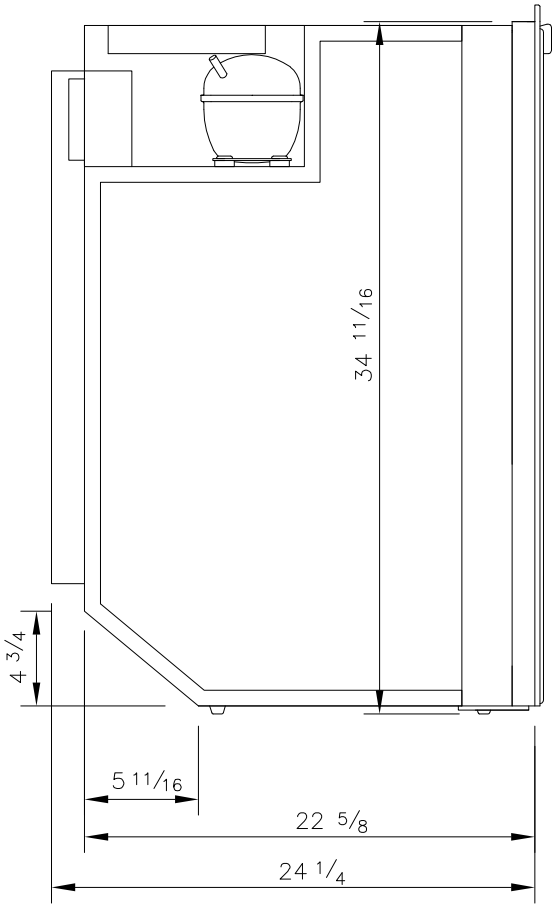

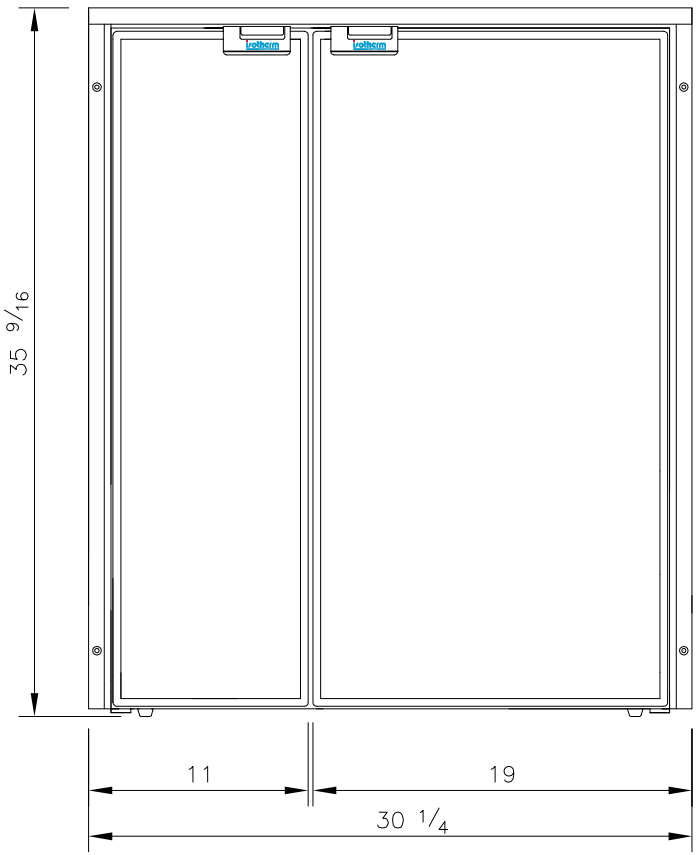

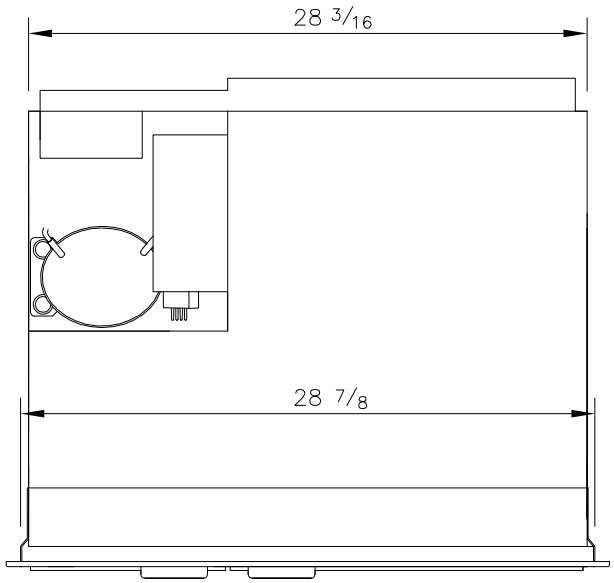

Top view

Refrigerator: 5.1 cu.ft.
Freezer: 1.8 cu.ft.

Itemref	Quantity	Title/Name, designation, material, dimension etc			Article No./Reference	
Designed by		Checked by	Approved by – date	Filename	Date 080104/LLG	Scale
Owner				Title/Name Isotherm Cruise 200		
				Drawing number CR 200	Edition U	Sheet

RevNo	Revision note	Date	Signature	Checked