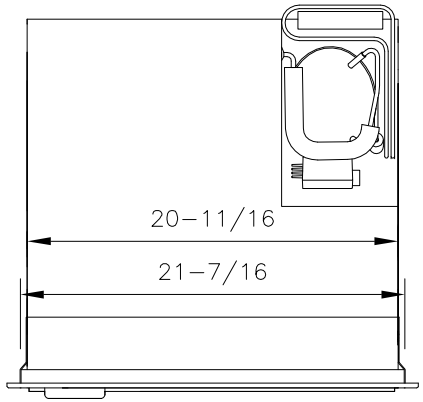

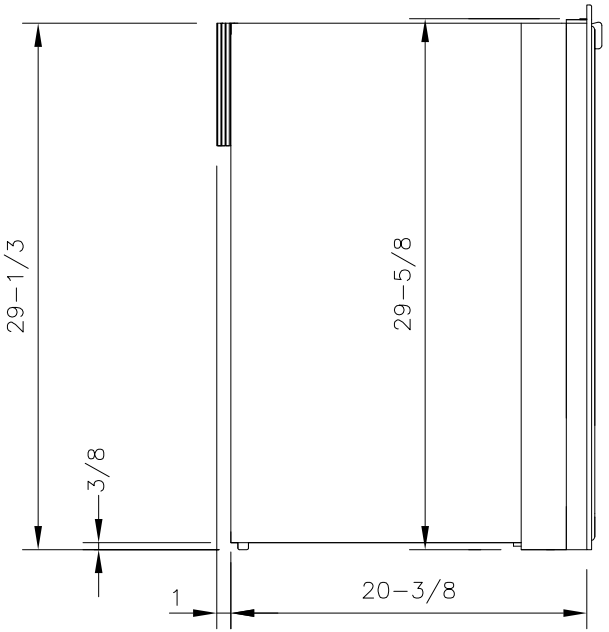

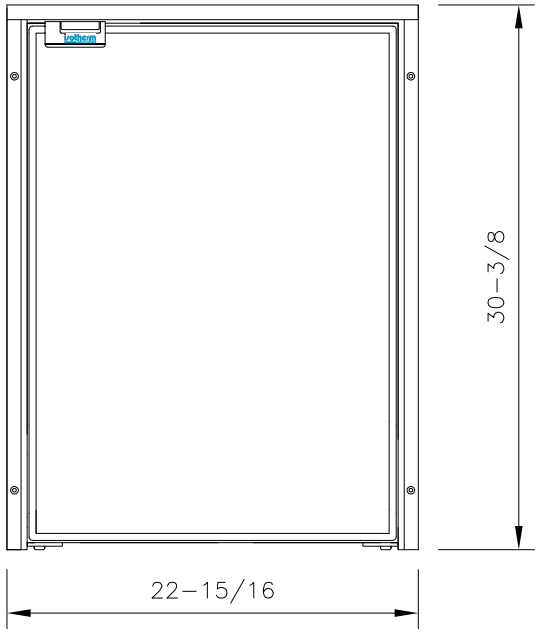

CR130 with flush mounting frame

Itemref	Quantity	Title/Name, designation, material, dimension etc			Article No./Reference	
Designed by		Checked by	Approved by – date	Filename	Date 080104/LLG	Scale
Owner				Title/Name Isotherm Cruise 130		
				Drawing number CR130 FL	Edition U	Sheet

RevNo	Revision note	Date	Signature	Checked